ROBOTICS

Product specification

IRB 6790

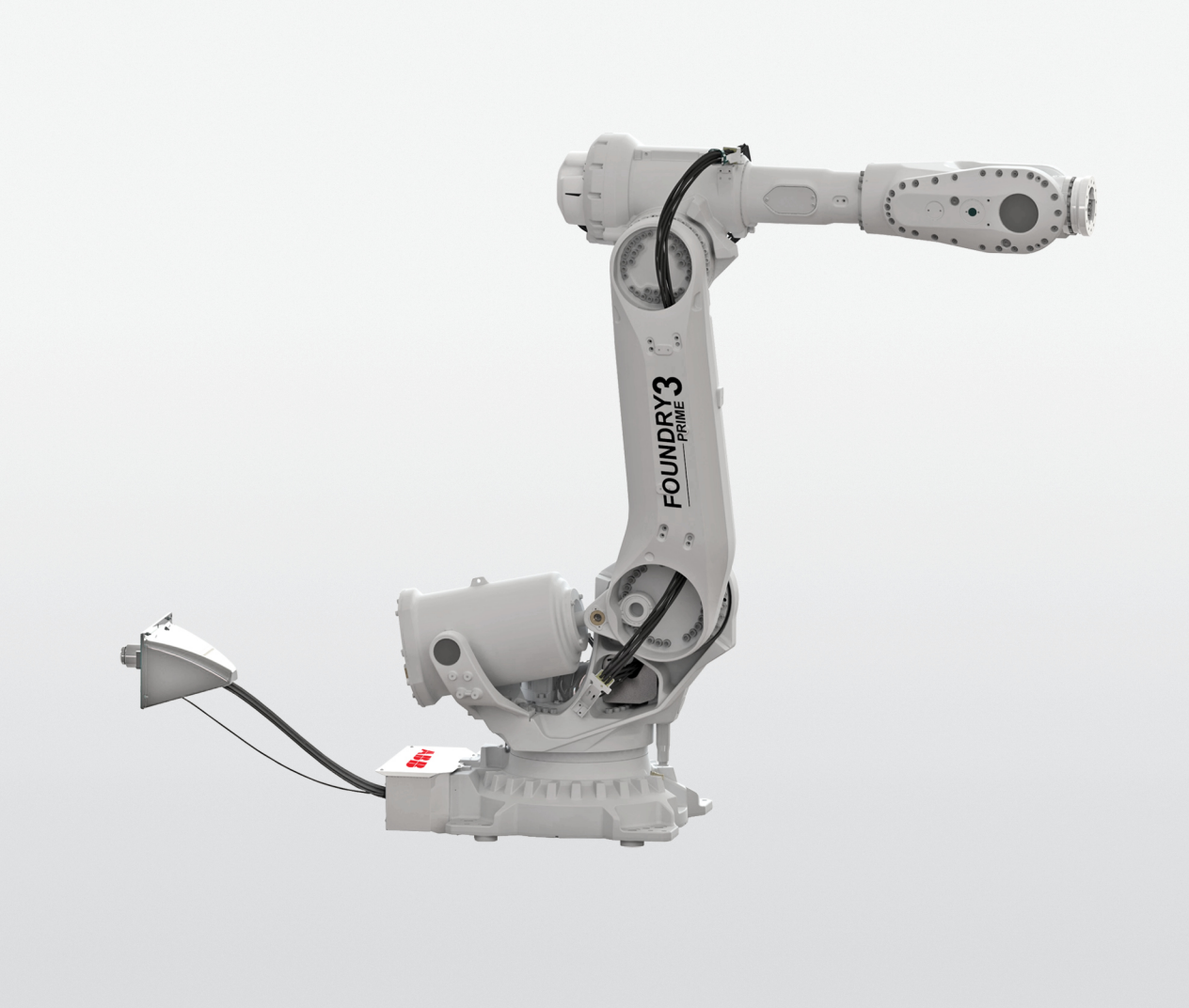

Trace back information:
Workspace 24A version a16
Checked in 2024-03-07
Skribenta version 5.5.019

Product specification

IRB 6790 - 235/2.65
IRB 6790 - 205/2.80

IRC5

Document ID: 3HAC064168-001

Revision: B

© Copyright 2024 ABB. All rights reserved.
Specifications subject to change without notice.

The information in this manual is subject to change without notice and should not be construed as a commitment by ABB. ABB assumes no responsibility for any errors that may appear in this manual.

Except as may be expressly stated anywhere in this manual, nothing herein shall be construed as any kind of guarantee or warranty by ABB for losses, damage to persons or property, fitness for a specific purpose or the like.

In no event shall ABB be liable for incidental or consequential damages arising from use of this manual and products described herein.

This manual and parts thereof must not be reproduced or copied without ABB's written permission.

Keep for future reference.

Additional copies of this manual may be obtained from ABB.

Original instructions.

© Copyright 2024 ABB. All rights reserved.
Specifications subject to change without notice.

Table of contents

Overview of this product specification 7

1 Description **9**

1.1 Structure 9
1.1.1 Introduction 9
1.1.2 Different robot variants 12
1.1.3 Technical data 13
1.2 Standards 15
1.2.1 Applicable standards 15
1.3 Installation 17
1.3.1 Introduction to installation 17
1.3.2 Operating requirements 18
1.3.3 Assembling the manipulator 19
1.3.4 Overpressure system 26
1.4 Calibration and references 29
1.4.1 Calibration methods 29
1.4.2 Fine calibration 31
1.4.3 Absolute Accuracy calibration 32
1.5 Load diagrams 34
1.5.1 Introduction 34
1.5.2 Diagrams 35
1.5.3 Maximum load and moment of inertia for full and limited axis 5 (center line down) movement 39
1.5.4 Wrist torque 41
1.5.5 Maximum TCP acceleration 42
1.6 Fitting equipment to the robot 43
1.7 Maintenance and troubleshooting 49
1.8 Robot motion 50
1.8.1 Robot motion 50
1.8.2 Performance according to ISO 9283 52
1.8.3 Velocity 53
1.8.4 Robot stopping distances and times 54

2 Specification of variants and options **55**

2.1 Introduction to variants and options 55
2.2 Manipulator 56
2.3 Floor cables 58
2.4 Process 59
2.5 Warranty 60

3 Accessories **61**

3.1 Introduction to accessories 61

Index **63**

© Copyright 2024 ABB. All rights reserved.

This page is intentionally left blank

Overview of this product specification

About this product specification

It describes the performance of the manipulator or a complete family of manipulators in terms of:

- The structure and dimensions prints
- The fulfillment of standards, safety and operating requirements
- The load diagrams, mounting or extra equipment, the motion and the robot reach
- The specification of variants and options available

Usage

Product specifications are used to find data and performance about the product, for example to decide which product to buy. How to handle the product is described in the product manual.

Users

It is intended for:

- Product managers and product personnel
- Sales and marketing personnel
- Order and customer service personnel
- Robot programmers
- Project leaders
- Design engineers

References

Reference	Document ID
Product specification - Controller IRC5 IRC5 with main computer DSQC1000.	*3HAC047400-001*
Product specification - Controller software IRC5 IRC5 with main computer DSQC1000 and RobotWare 6.	*3HAC050945-001*
Product manual - IRB 6790 Foundry Prime	*3HAC063331-001*
Product specification - Robot stopping distances according to ISO 10218-1	*3HAC048645-001*
Product specification - Robot user documentation, IRC5 with RobotWare 6	*3HAC052355-001*

Revisions

Revision	Description
A	First release
B	Published in release 24A. The following updates are done in this revision: • Minor corrections.

© Copyright 2024 ABB. All rights reserved.

This page is intentionally left blank

1 Description

1.1 Structure

1.1.1 Introduction

General

The IRB 6790 series is ABB Robotics 7th generation of high payload, high performance industrial robots. Based on the famous IRB 6700 series, with large working range, the very high wrist torque, the service friendly modular built up and the high availability, significant for ABB's robots.

The IRB 6790 is designed to generally withstand a very harsh environment, including detergents used in spraying applications. Even with this very robust design, some limitations exist:

- Detergents and allowed PH levels are specified in the product manual.
- Warranty will not apply if corrosion happens on structural parts. This corrosion/rust will not influence the functionality of the product.
- Maintenance needs to be performed according to recommendations in the product manuals.

Software product range

We have added a range of software products - all falling under the umbrella designation of Active Safety - to protect not only personnel in the unlikely event of an accident, but also robot tools, peripheral equipment and the robot itself.

Operating system

The robot is equipped with the IRC5 controller and robot control software, RobotWare. RobotWare supports every aspect of the robot system, such as motion control, development and execution of application programs, communication etc. see *Product specification - Controller IRC5*.

Safety

Safety standards valid for complete robot, manipulator and controller.

Additional functionality

For additional functionality, the robot can be equipped with optional software for application support - for example gluing and welding, communication features - network communication - and advanced functions such as multitasking, sensor control etc. For a complete description on optional software, see *Product specification - Controller software IRC5*.

Continues on next page

© Copyright 2024 ABB. All rights reserved.

Foundry Prime

Robots with protection type Foundry Prime are specially designed to work in harsh environments such as water jet cleaning, high pressure deburring, immersion cleaning, washing and similar applications. To ensure that the protection offers the best reliability, special measures are required during installation and operation. It is required that the environmental and application conditions are fulfilled and that the special maintenance activities and intervals for the Foundry Prime protected robot are followed.

The manipulator can withstand indirect spray from jet pressure (max. 700 bar) and 100% humidity (gaseous mixture only).The manipulator can work with a cleaning bath temperature up to 60°C.

The motors, the balancing device, and the serial measurement board cavity must be pressurized on Foundry Prime robots during operation and shut down. For detailed information of the maintenance program, see chapter Maintenance in the *Product manual - IRB 6790 Foundry Prime*.

Washing and cleaning detergents

General washing detergent requirements:

- Washing and cleaning detergent with pH 7-10. Down to pH6 during short periods provided that the robot is washed carefully with tap water afterwards.
- Max. temperature on washing detergent is 60°C
- The user must follow the supplier's recommendations regarding detergent concentration and pH value
- Washing and cleaning detergents with corrosion inhibitor should be used

Robot axes

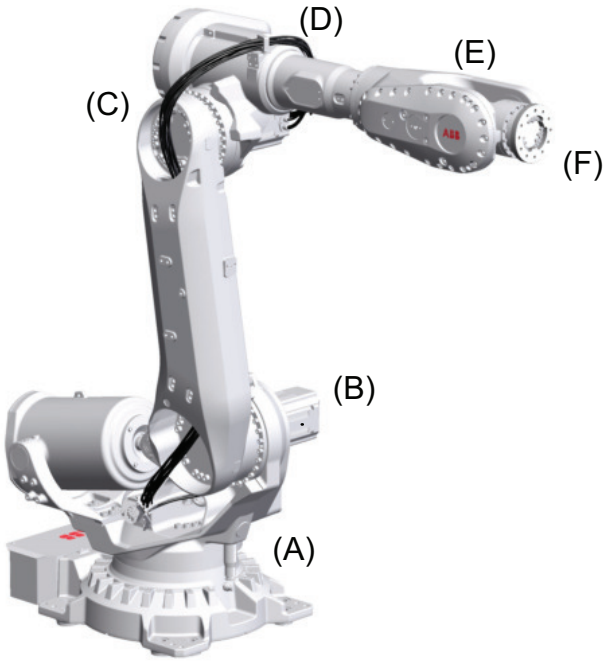

xx1300000244

A	Axis 1	B	Axis 2

Continues on next page

© Copyright 2024 ABB. All rights reserved.

C	Axis 3	D	Axis 4
E	Axis 5	F	Axis 6

© Copyright 2024 ABB. All rights reserved.

1.1.2 Different robot variants

General

The IRB 6790 is available in two variants.

Robot variants

The following variants are available.

Robot	Handling capacity (kg)	Reach (m)
IRB 6790	235 kg	2.65 m
IRB 6790	205 kg	2.80 m

© Copyright 2024 ABB. All rights reserved.

1.1.3 Technical data

Available mounting options

	Prefix	Description
Mounting	-	IRB 6790: Floor-mounted manipulator

Manipulator weight

Robot variant	Weight
IRB 6790-235/2.65	1,260 kg
IRB 6790-205/2.80	1,270 kg

Other technical data

Data	Description	Note
Airborne noise level	The sound pressure level outside the working space.	< 71 dB (A) Leq (acc. to machinery directive 2006/42/EG)

Power consumption at max load

Type of movement	235/2.65	205/2.80
ISO Cube Max. velocity (kW)	2.7	2.6

Robot in calibration position	235/2.65	205/2.80
Brakes engaged (kW)	0.16	0.17
Brakes disengaged (kW)	0.71	0.84

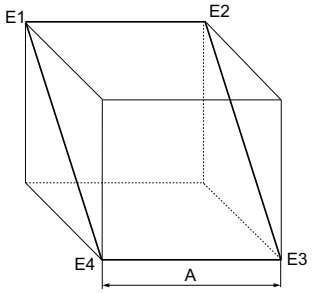

xx1000000101

Pos	Description
A	1,000 mm

Continues on next page

© Copyright 2024 ABB. All rights reserved.

Main dimensions of IRB 6790

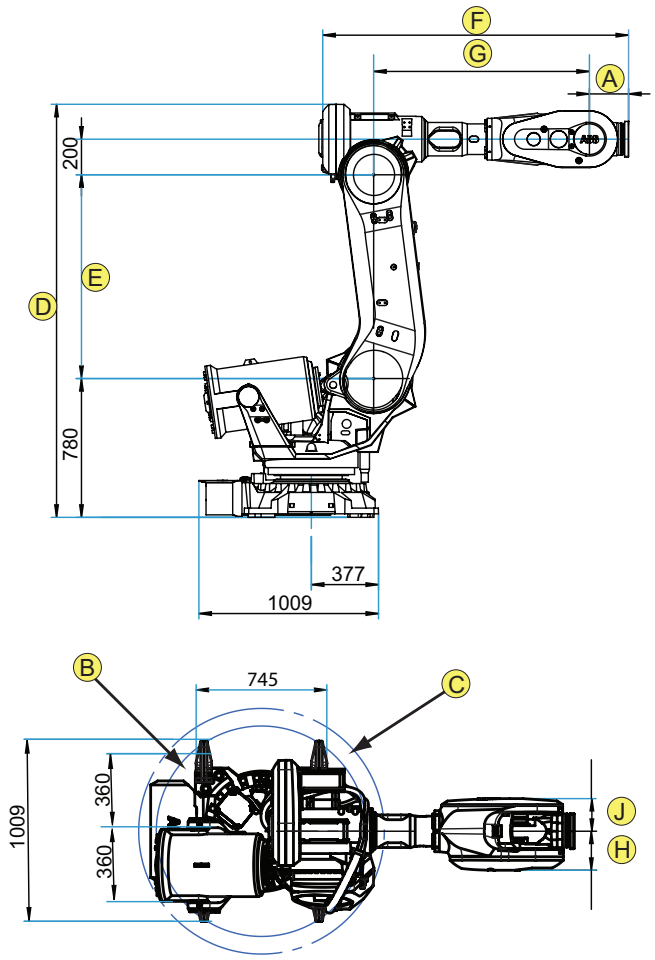

xx1300000241

Pos	Description
A	200 mm
B	Radius ax1, front = 532 mm
C	Radius ax1, back = 633 mm

Robot variant	D	E	F	G	H	J
IRB 6790 - 235/2.65	2300	1135	1670	1,182.5	209	186
IRB 6790 - 205/2.80	2445	1280	1670	1,182.5	186	209

© Copyright 2024 ABB. All rights reserved.

1.2 Standards

1.2.1 Applicable standards

Note

The listed standards are valid at the time of the release of this document. Phased out or replaced standards are removed from the list when needed.

General

The product is designed in accordance with ISO 10218-1:2011, Robots for industrial environments - Safety requirements -Part 1 Robots, and applicable parts in the normative references, as referred to from ISO 10218-1:2011. In case of deviations from ISO 10218-1:2011, these are listed in the declaration of incorporation which is part of the product delivery.

Normative standards as referred to from ISO 10218-1

Standard	Description
ISO 9283:1998	Manipulating industrial robots - Performance criteria and related test methods
ISO 10218-2	Robots and robotic devices - Safety requirements for industrial robots - Part 2: Robot systems and integration
ISO 12100	Safety of machinery - General principles for design - Risk assessment and risk reduction
ISO 13849-1:2006	Safety of machinery - Safety related parts of control systems - Part 1: General principles for design
ISO 13850	Safety of machinery - Emergency stop - Principles for design
IEC 60204-1	Safety of machinery - Electrical equipment of machines - Part 1: General requirements

Deviations from ISO 10218-1:2011 for IRC5 with MultiMove

A deviation exists towards ISO 10218-1:2011, paragraph *5.9 Control of simultaneous motion*, for the option MultiMove. See the application manual for MultiMove.

Other standards used in design

Standard	Description
ISO 9787:2013	Robots and robotic devices -- Coordinate systems and motion nomenclatures
IEC 61000-6-2	Electromagnetic compatibility (EMC) – Part 6-2: Generic standards – Immunity standard for industrial environments
IEC 61000-6-4	Electromagnetic compatibility (EMC) – Part 6-4: Generic standards – Emission standard for industrial environments
ISO 13732-1:2006	Ergonomics of the thermal environment - Part 1
IEC 60529:1989 + A2:2013	Degrees of protection provided by enclosures (IP code)

Continues on next page

© Copyright 2024 ABB. All rights reserved.

Consulted guidelines

The following guidelines have inspired and guided the product design:

Guideline	Description
VDI 3397 Part 1	Metalworking Fluids
VDI 3035	Design of machine tools, production lines and peripheral equipment for the use of metalworking fluids
DIN 51385	Lubricants – Processing fluids for forming and machining of materials – Terms
DIN 51485	Lubricants – Processing fluids for forming and machining of materials – Metalworking and forming fluids: Requirements and test methods

© Copyright 2024 ABB. All rights reserved.

1.3 Installation

1.3.1 Introduction to installation

General

IRB 6790 are designed for floor mounting (no tilting allowed around X-axis or Y-axis). Depending on the robot version, an end effector with max. weight of 205 to 235 kg including payload, can be mounted on the tool flange (axis 6). See *Load diagrams on page 34*.

Extra loads

The upper arm can handle an additional load of 50 kg and the frame on axis 1 can handle an additional load of 250 kg.

See *Fitting equipment to the robot on page 43*.

Working range limitation

To increase the safety of the robot, the working range of axis 1 can be restricted by extra mechanical stops.

Two stops which allow the working range to be restricted in increments of 15°.

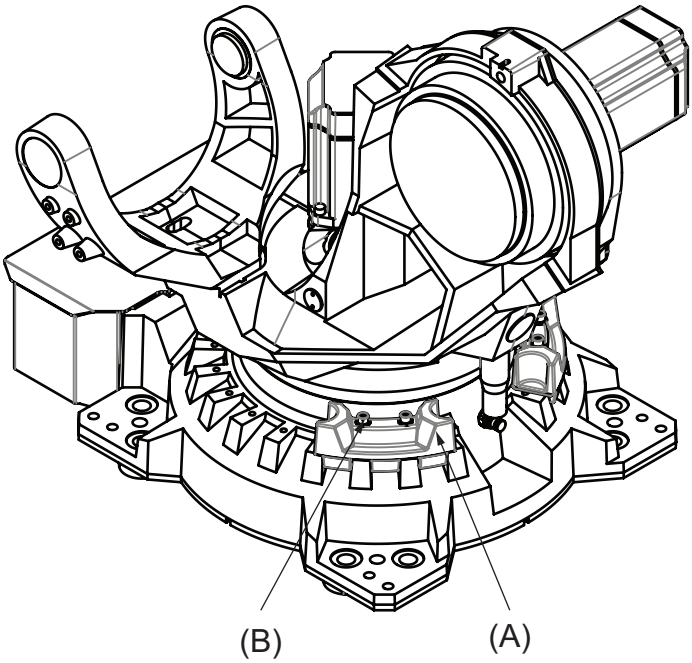

xx1400002035

Pos	Description
A	Two mechanical stops
B	Bolt tightening torque: 60 Nm[i]

[i] In corrosive environment exchange bolts to stainless steel variants.

© Copyright 2024 ABB. All rights reserved.

1.3.2 Operating requirements

Protection standards

Robot version/Protection standard	IEC 60529
All variants, manipulator	IP69[i]

[i] Includes all manipulator electrical compartments, excludes the Harting connector on the connection panel which is IP67.

Explosive environments

The robot must not be located or operated in an explosive environment.

Ambient temperature

Description	Standard/Option	Temperature
Manipulator during operation	Standard	Minimum: +5°C[i] (41°F) Maximum: +50°C (122°F)
For the controller	Standard/Option	See *Product specification - Controller IRC5*
Complete robot during transportation and storage	Standard	Minimum: -25°C (-13°F) Maximum: +55°C (+131°F)
for short periods (not exceeding 24 hours)	Standard	+70°C (+158°F)

[i] At low environmental temperature (below 10° C) a warm-up phase is recommended to be run with the robot. Otherwise there is a risk that the robot stops or runs with lower performance due to temperature dependent oil and grease viscosity.

Relative humidity

Description	Relative humidity
Complete robot during transportation and storage	100% at constant temperature (gaseous only)
Complete robot during operation	100% at constant temperature (gaseous only).

© Copyright 2024 ABB. All rights reserved.

1.3.3 Assembling the manipulator

Maximum load

Maximum load in relation to the base coordinate system.

Floor mounted

Force	Endurance load (in operation)	Max. load (emergency stop)
Force xy	±7.4 kN	±19.8 kN
Force z	14.6 ±4.5 kN	14.6 ±15.7 kN
Torque xy	±21.0 kNm	±37.1 kNm
Torque z	±5.0 kNm	±11.4 kNm

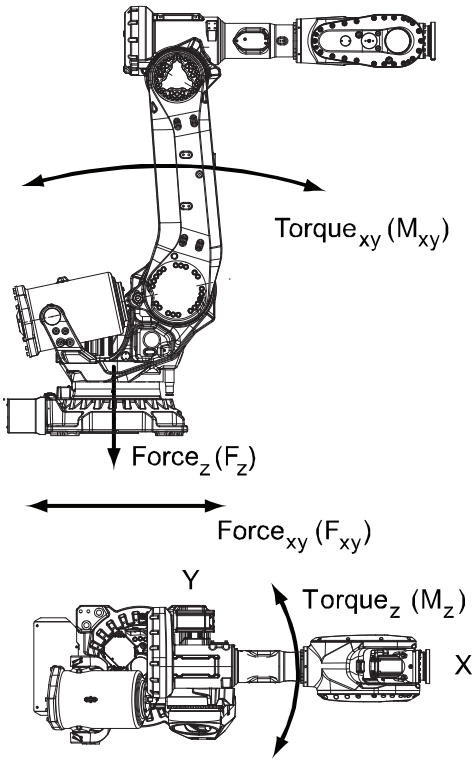

xx1300000242

Note regarding M_{xy} and F_{xy}

The bending torque (M_{xy}) can occur in any direction in the XY-plane of the base coordinate system.

The same applies to the transverse force (F_{xy}).

Continues on next page

© Copyright 2024 ABB. All rights reserved.

Fastening holes robot base - for all variants

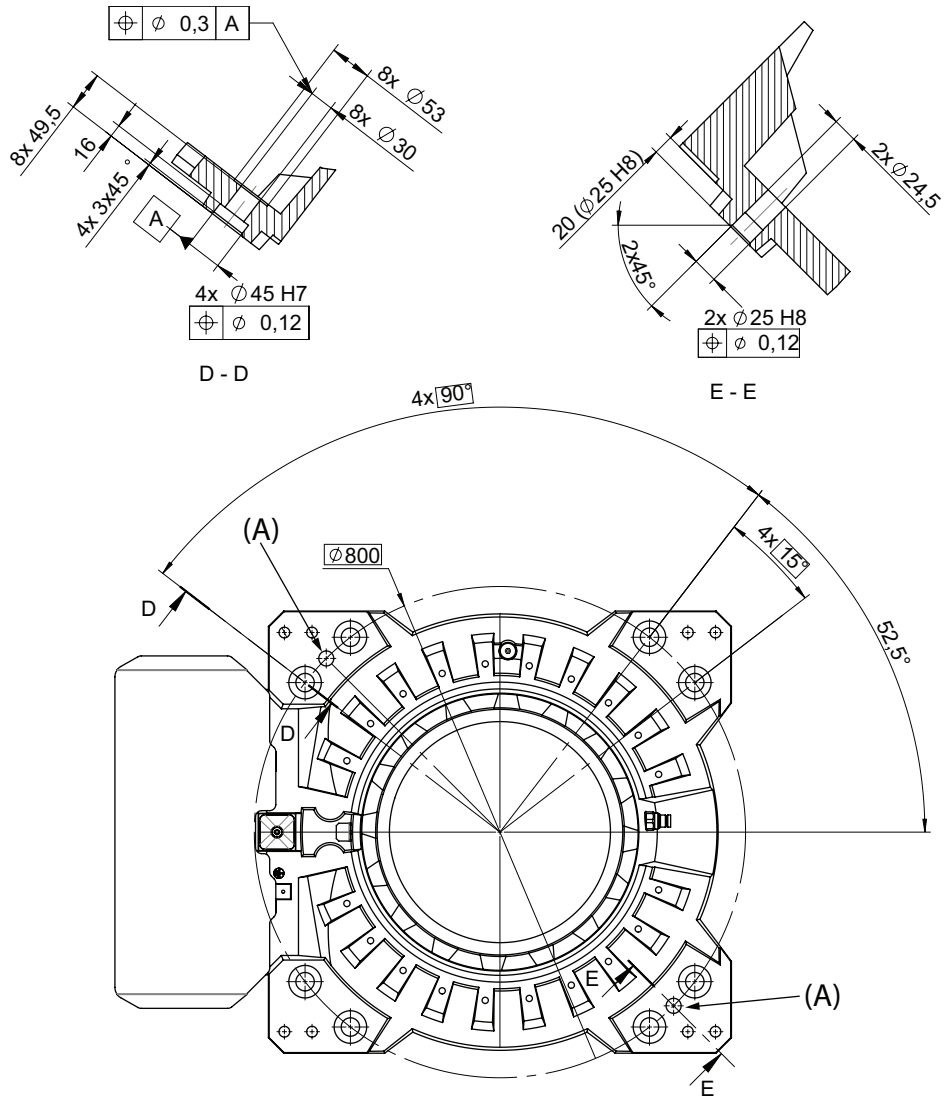

xx1300000243

Pos	Description
A	Holes for guide pins (x2)

Note

Holes for guide pins (x2) Rear hole straight slot, see *Guide pins on page 24*.

Fastener quality

Suitable screws:	M24 x 100 [i]
Quality:	8.8
Screw tightening yield point utilization factor (v) (according to VDI2230):	90% (v=0.9)
Suitable washer:	4 mm flat washer [i]

Continues on next page

© Copyright 2024 ABB. All rights reserved.

Tightening torque:	550 Nm (screws lubricated with Molykote 1000) 600-725 Nm, typical 650 Nm (screws none or lightly lubricated)

i Stainless steel versions recommended in corrosive environments.

Note

Only two guide pins shall be used. The corresponding holes in the base plate shall be circular according to figure *Base plate drawing on page 21*.

AbsAcc performance

Regarding AbsAcc performance, the use of guide pins are mandatory.

Base plate drawing

Note

Base plate is not recommended for corrosive environments.

Continues on next page

© Copyright 2024 ABB. All rights reserved.

1.3.3 Assembling the manipulator
Continued

The following figure shows the option base plate (dimensions in mm).

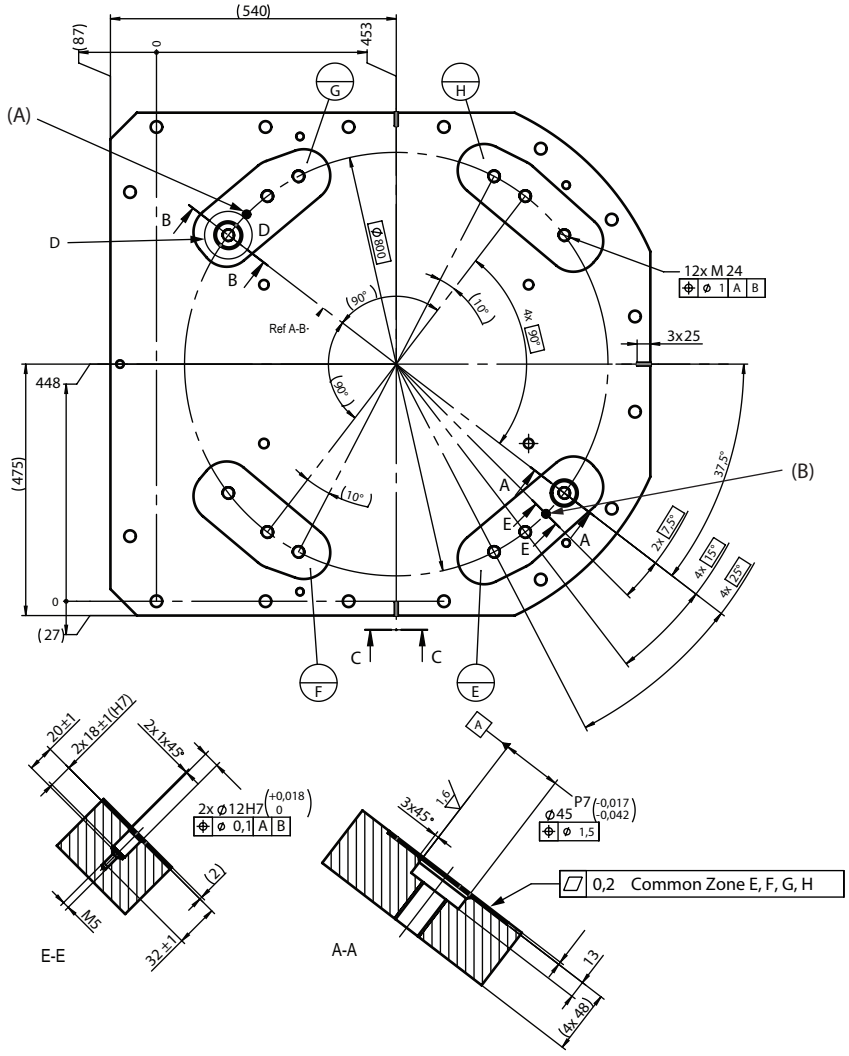

xx1500000246

Pos	Description
A, B	Hole for guide pin, cylindrical, see *Guide pins on page 24*
E, F, G, H	Common tolerance zone (accuracy all over the base plate from one contact surface to the other)

Continues on next page

© Copyright 2024 ABB. All rights reserved.

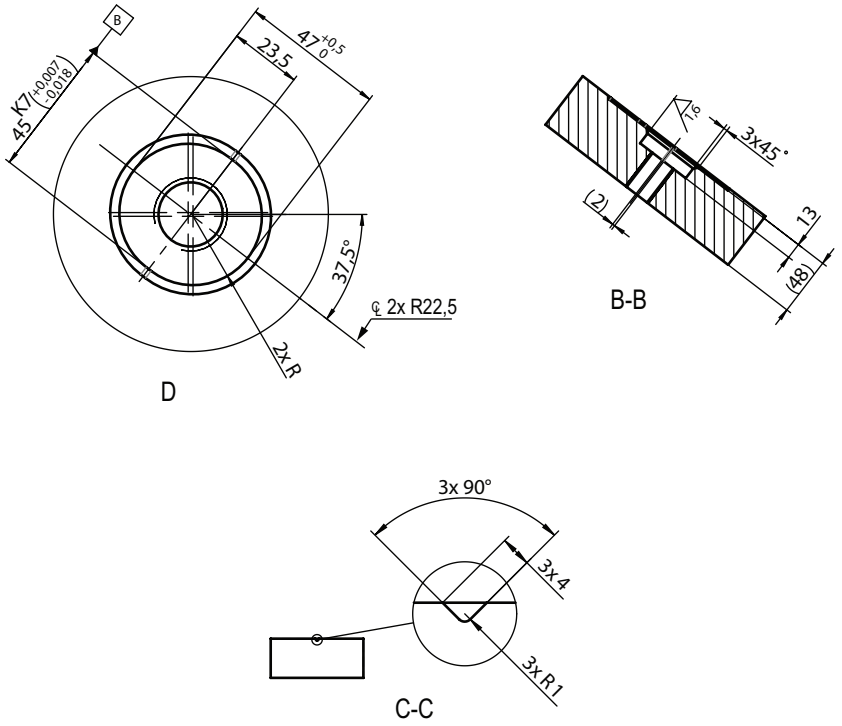

xx1500000247

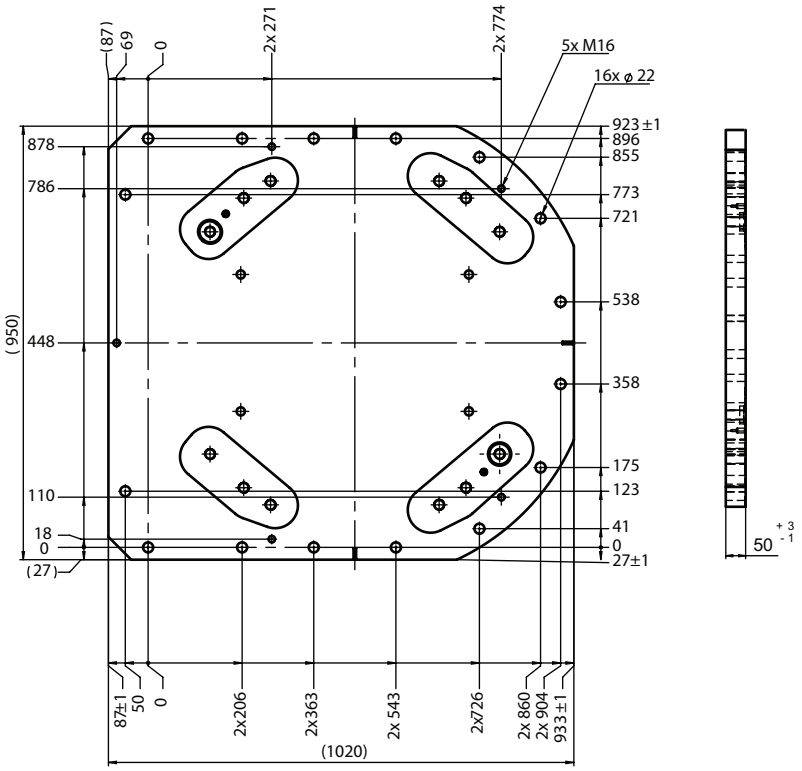

xx1900000119

A	Color: RAL 9005 Thickness: 80-100 µm Weight: 360 kg

Continues on next page

© Copyright 2024 ABB. All rights reserved.

1.3.3 Assembling the manipulator
Continued

Guide pins

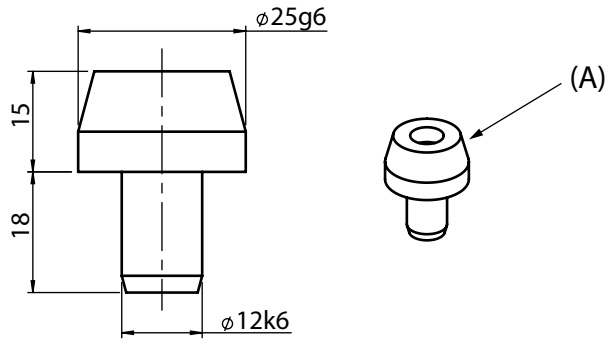

XX1500000248

Pos	Description
A	Cylindrical guide pin (x2)

Assembly of guide pins

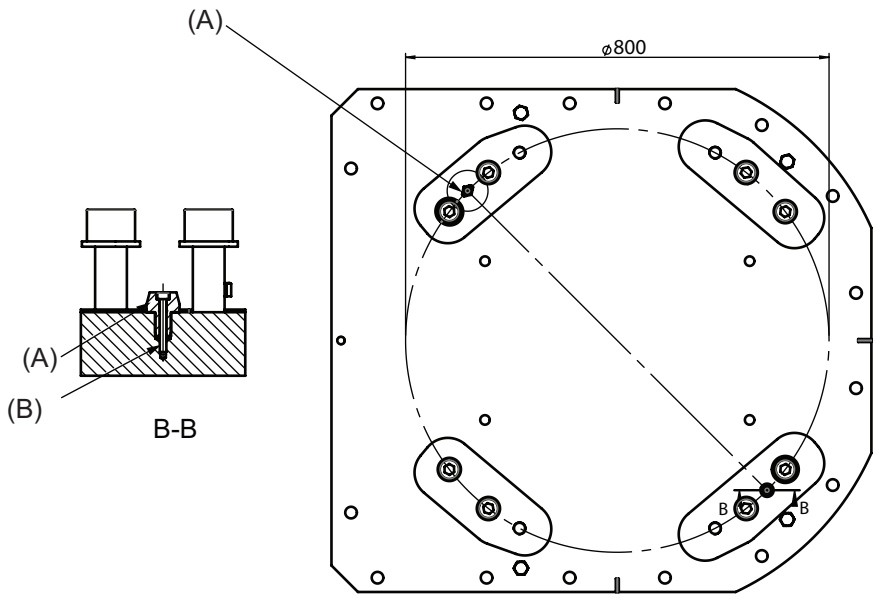

Pos	Description
A	Cylindrical guide pin (x2)
B	M5 x 40. Tightening torque 6 Nm. (x2)

Note

All screws and pins are delivered in a plastic bag together with the base plate.

Continues on next page

© Copyright 2024 ABB. All rights reserved.

Installation on a coherent and conductive structure

The manipulator must be installed on a coherent and conductive metallic structure which reaches the connector point on the wall (unbroken, to be able to connect to ground). The connector point is installed on the outside (dry) wall to protect the connectors from detergents. The flow sensor at the connection point does not withstand fluids.

Protect the interface plate from direct or indirect spray with the harness/interface cover. Put the interface plate where it is not subject to direct or indirect spray.

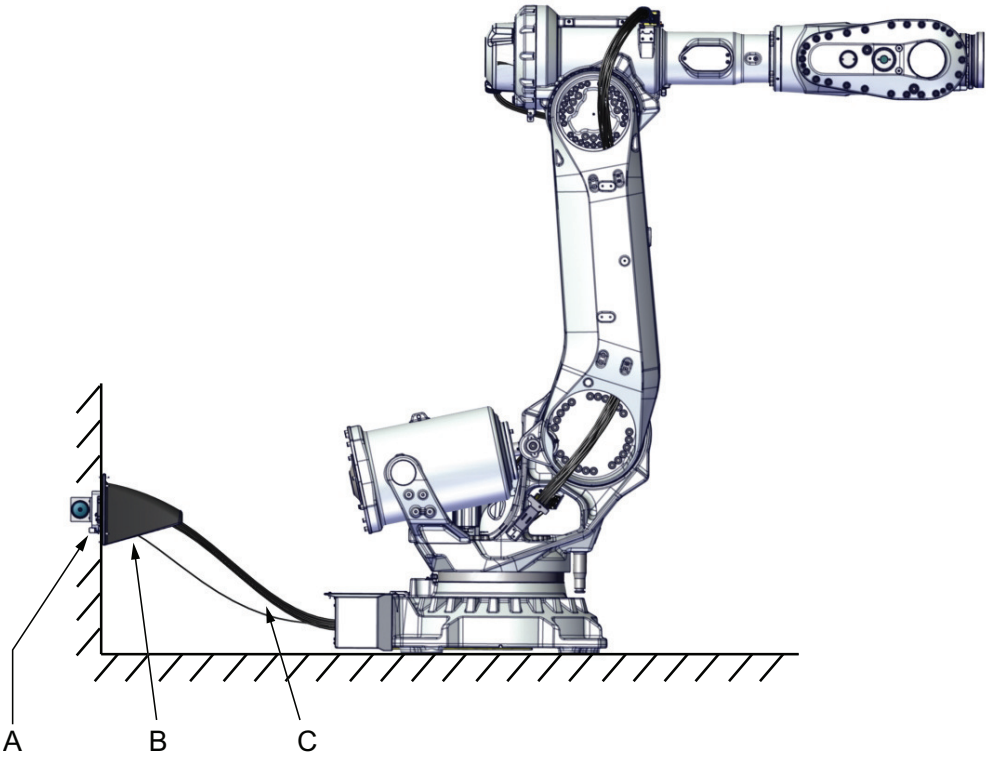

xx1700001180

A	Connector point / interface plate
B	Harness/interface cover
C	Cables between interface plate and manipulator base

© Copyright 2024 ABB. All rights reserved.

1.3.4 Overpressure system

Overpressure system

The system is equipped with an overpressure device and a flow sensor.

The control system will alert if the air leakage exceeds the preset value.

Gasket required on the interface plate

A gasket is included in the delivery and required on the interface plate according to the figure. The proposed dimensions of the required cut in the wall is 410x210 mm.

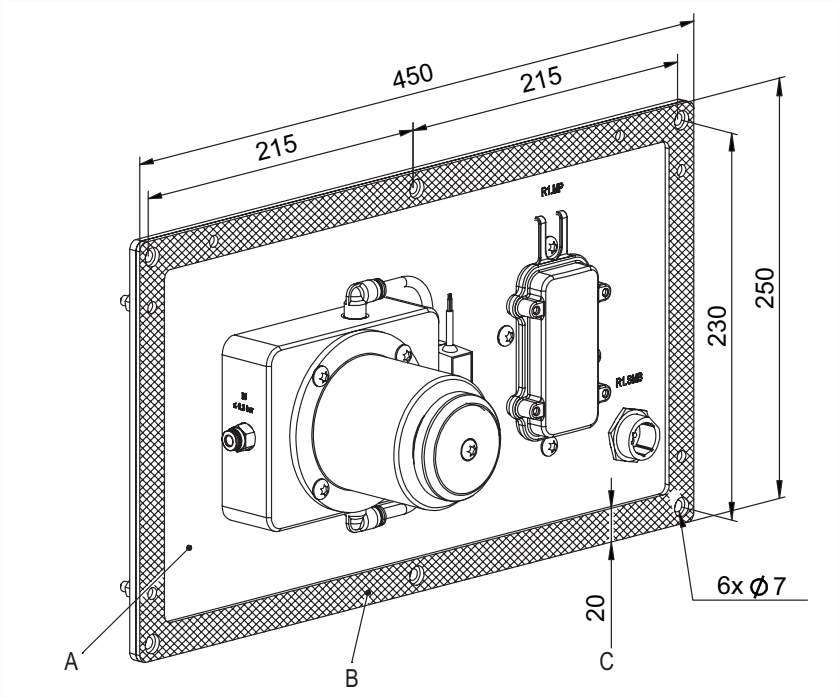

xx1700002199

A	Interface plate, stainless steel
B	Gasket (attached with M6, 6 pcs)
C	Gasket width dimension

Continues on next page

© Copyright 2024 ABB. All rights reserved.

Interface plate connections

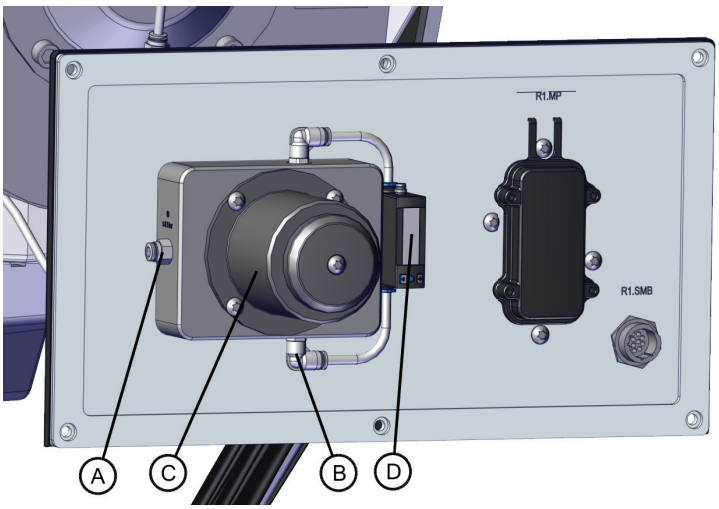

xx2300001821

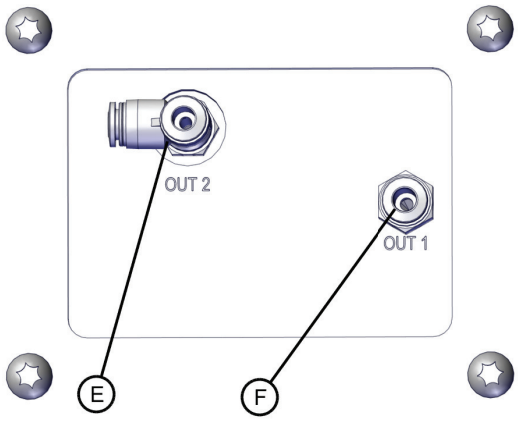

xx2300001822

A	Air inlet
B	Outlet air to flow sensor
C	Pressure relief valve
D	Display
E	OUT 2 connection
F	OUT 1 connection

Continues on next page

© Copyright 2024 ABB. All rights reserved.

Air quality for pressurizing the robot

The air supplied at Air Inlet of Overpressure Unit must meet the requirements stated in the table below. An example of pressure regulator suited for this is Festo LRP 1/4-0.7.

WARNING

If the pressurized air contains oil, it could result in a brake failure in the motors and cause the robot arms to fall down, leading to personal injury or physical damage.

Parameter	Value
Dew point	<+2°C at 6 bar
Solid particle size	<5 microns
Oil content	<1 ppm (1 mg/m^3)
Air flow	>100 L/min
Air pressure	0.2-0.3 bar

Air preparation unit components

Components such as oil absorber, air dryer and pressure regulator are not included in the delivery of the overpressure system.

© Copyright 2024 ABB. All rights reserved.

1.4 Calibration and references

1.4.1 Calibration methods

Overview

This section specifies the different types of calibration and the calibration methods that are supplied by ABB.

More information is available in the product manual.

Types of calibration

Type of calibration	Description	Calibration method
Standard calibration	The calibrated robot is positioned at calibration position. Standard calibration data is found on the SMB (serial measurement board) or EIB in the robot.	Axis Calibration
Absolute accuracy calibration (optional)	Based on standard calibration, and besides positioning the robot at synchronization position, the Absolute accuracy calibration also compensates for: • Mechanical tolerances in the robot structure • Deflection due to load Absolute accuracy calibration focuses on positioning accuracy in the Cartesian coordinate system for the robot. Absolute accuracy calibration data is found on the serial measurement board (SMB) or other robot memory. A robot calibrated with Absolute accuracy has a sticker next to the identification plate of the robot (IRC5). To regain 100% Absolute accuracy performance, the robot must be recalibrated for absolute accuracy after repair or maintenance that affects the mechanical structure. ABSOLUTE ACCURACY 3HAC 14257-1 xx0400001197	CalibWare

Brief description of calibration methods

Axis Calibration method

Axis Calibration is a standard calibration method for calibration of IRB 6790 . It is the recommended method in order to achieve proper performance.

The following routines are available for the Axis Calibration method:

- Fine calibration
- Update revolution counters
- Reference calibration

Continues on next page

© Copyright 2024 ABB. All rights reserved.

The calibration equipment for Axis Calibration is delivered as a toolkit.

The actual instructions of how to perform the calibration procedure and what to do at each step is given on the FlexPendant. You will be guided through the calibration procedure, step by step.

CalibWare - Absolute Accuracy calibration

The CalibWare tool guides through the calibration process and calculates new compensation parameters. This is further detailed in the *Application manual - CalibWare Field*.

If a service operation is done to a robot with the option Absolute Accuracy, a new absolute accuracy calibration is required in order to establish full performance. For most cases after replacements that do not include taking apart the robot structure, standard calibration is sufficient.

© Copyright 2024 ABB. All rights reserved.

1.4.2 Fine calibration

General

The fine calibration is done with the Axis calibration method.

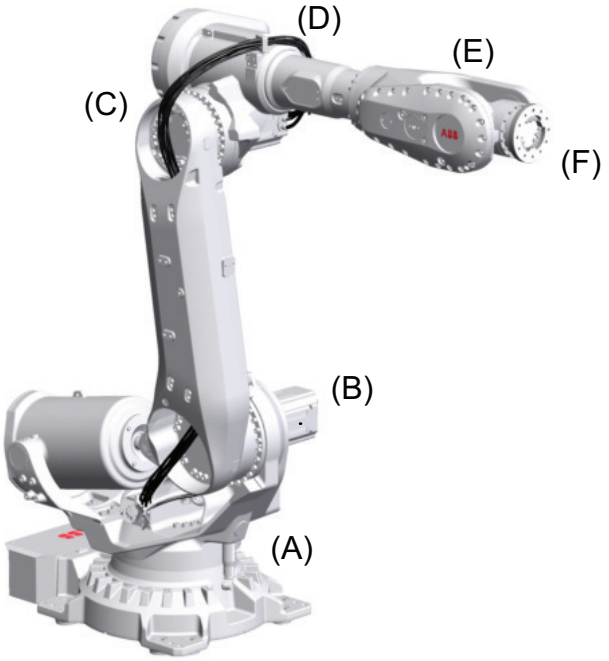

xx1300000244

Axes

Pos	Description	Pos	Description
A	Axis 1	B	Axis 2
C	Axis 3	D	Axis 4
E	Axis 5	F	Axis 6

© Copyright 2024 ABB. All rights reserved.

1.4.3 Absolute Accuracy calibration

Purpose

Absolute Accuracy is a calibration concept that improves TCP accuracy. The difference between an ideal robot and a real robot can be several millimeters, resulting from mechanical tolerances and deflection in the robot structure. *Absolute Accuracy* compensates for these differences.

Here are some examples of when this accuracy is important:

- Exchangeability of robots
- Offline programming with no or minimum touch-up
- Online programming with accurate movement and reorientation of tool
- Programming with accurate offset movement in relation to eg. vision system or offset programming
- Re-use of programs between applications

The option *Absolute Accuracy* is integrated in the controller algorithms and does not need external equipment or calculation.

Note

The performance data is applicable to the corresponding RobotWare version of the individual robot.

What is included

Every *Absolute Accuracy* robot is delivered with:

- compensation parameters saved in the robot memory
- a birth certificate representing the *Absolute Accuracy* measurement protocol for the calibration and verification sequence.

A robot with *Absolute Accuracy* calibration has a label with this information on the manipulator.

Absolute Accuracy supports floor mounted, wall mounted, and ceiling mounted installations. The compensation parameters that are saved in the robot memory differ depending on which Absolute Accuracy option is selected.

When is *Absolute Accuracy* being used

Absolute Accuracy works on a robot target in Cartesian coordinates, not on the individual joints. Therefore, joint based movements (e.g. `MoveAbsJ`) will not be affected.

If the robot is inverted, the Absolute Accuracy calibration must be performed when the robot is inverted.

Absolute Accuracy active

Absolute Accuracy will be active in the following cases:

- Any motion function based on robtargets (e.g. `MoveL`) and ModPos on robtargets
- Reorientation jogging

Continues on next page

© Copyright 2024 ABB. All rights reserved.

- Linear jogging
- Tool definition (4, 5, 6 point tool definition, room fixed TCP, stationary tool)
- Work object definition

Absolute Accuracy not active

The following are examples of when Absolute Accuracy is not active:

- Any motion function based on a jointtarget (`MoveAbsJ`)
- Independent joint
- Joint based jogging
- Additional axes
- Track motion

Note

In a robot system with, for example, an additional axis or track motion, the Absolute Accuracy is active for the manipulator but not for the additional axis or track motion.

RAPID instructions

There are no RAPID instructions included in this option.

Production data

Typical production data regarding calibration are:

Robot	Positioning accuracy (mm)		
	Average	Max	% Within 1 mm
IRB 6790-235/2.55	0.35	0.75	100
IRB 6790-205/2.80	0.35	0.75	100

© Copyright 2024 ABB. All rights reserved.

1.5 Load diagrams

1.5.1 Introduction

WARNING

It is very important to always define correct actual load data and correct payload of the robot. Incorrect definitions of load data can result in overloading of the robot.

If incorrect load data is used, and/or if loads outside the load diagram are used, the following parts can be damaged due to overload:

- motors
- gearboxes
- mechanical structure

WARNING

In RobotWare, the service routine LoadIdentify can be used to determine correct load parameters. The routine automatically defines the tool and the load.

See *Operating manual - IRC5 with FlexPendant*, for detailed information.

WARNING

Robots running with incorrect load data and/or with loads outside the load diagram, will not be covered by robot warranty.

General

The load diagrams include a nominal payload inertia, J_0 of 15 kgm^2, and an extra load of 50 kg at the upper arm housing.

At different moment of inertia the load diagram will be changed. For robots that are allowed tilted, wall or inverted mounted, the load diagrams as given are valid and thus it is also possible to use RobotLoad within those tilt and axis limits.

Control of load case with RobotLoad

To verify a specific load case, use the RobotStudio add-in RobotLoad.

The result from RobotLoad is only valid within the maximum loads and tilt angles. There is no warning if the maximum permitted arm load is exceeded. For over-load cases and special applications, contact ABB for further analysis.

© Copyright 2024 ABB. All rights reserved.

1.5.2 Diagrams

IRB 6790-235/2.65

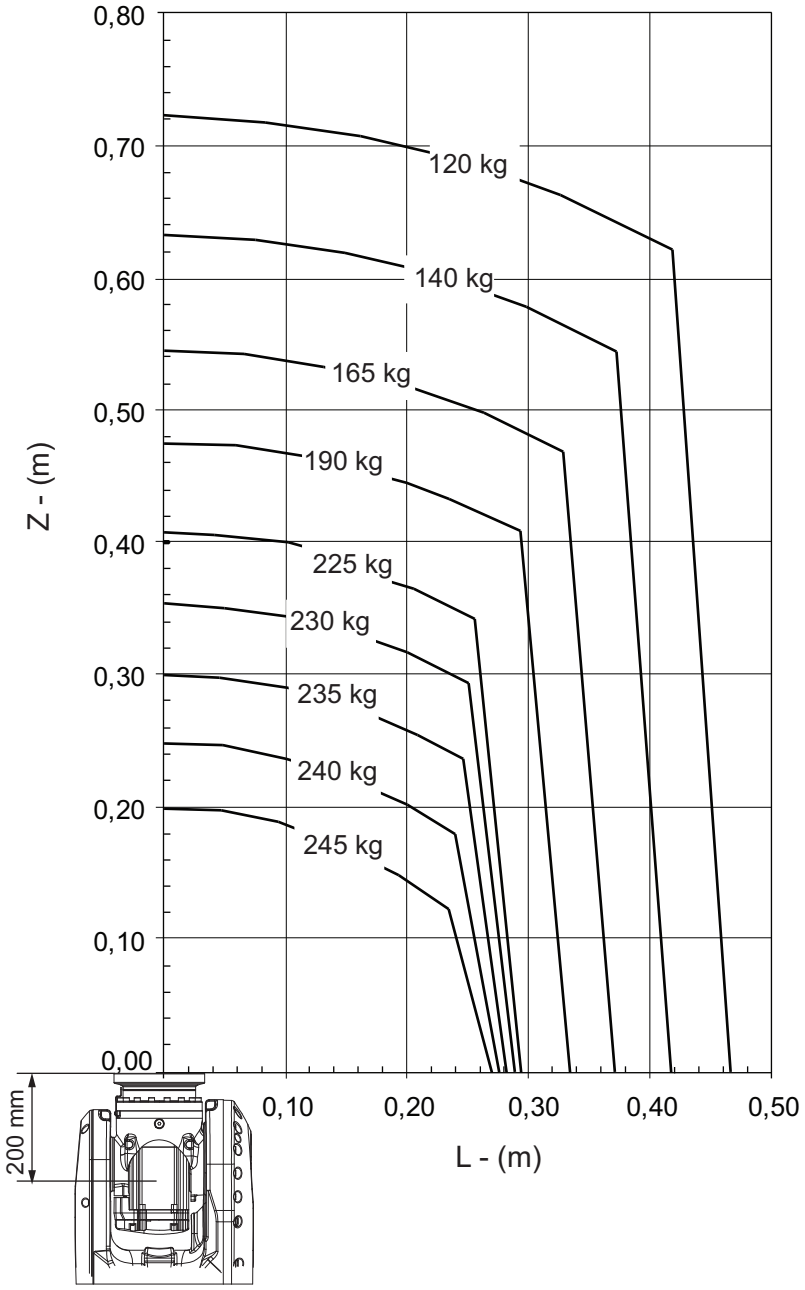

xx1300000245

Continues on next page

© Copyright 2024 ABB. All rights reserved.

IRB 6790-235/2.65 "Vertical Wrist" (±10°)

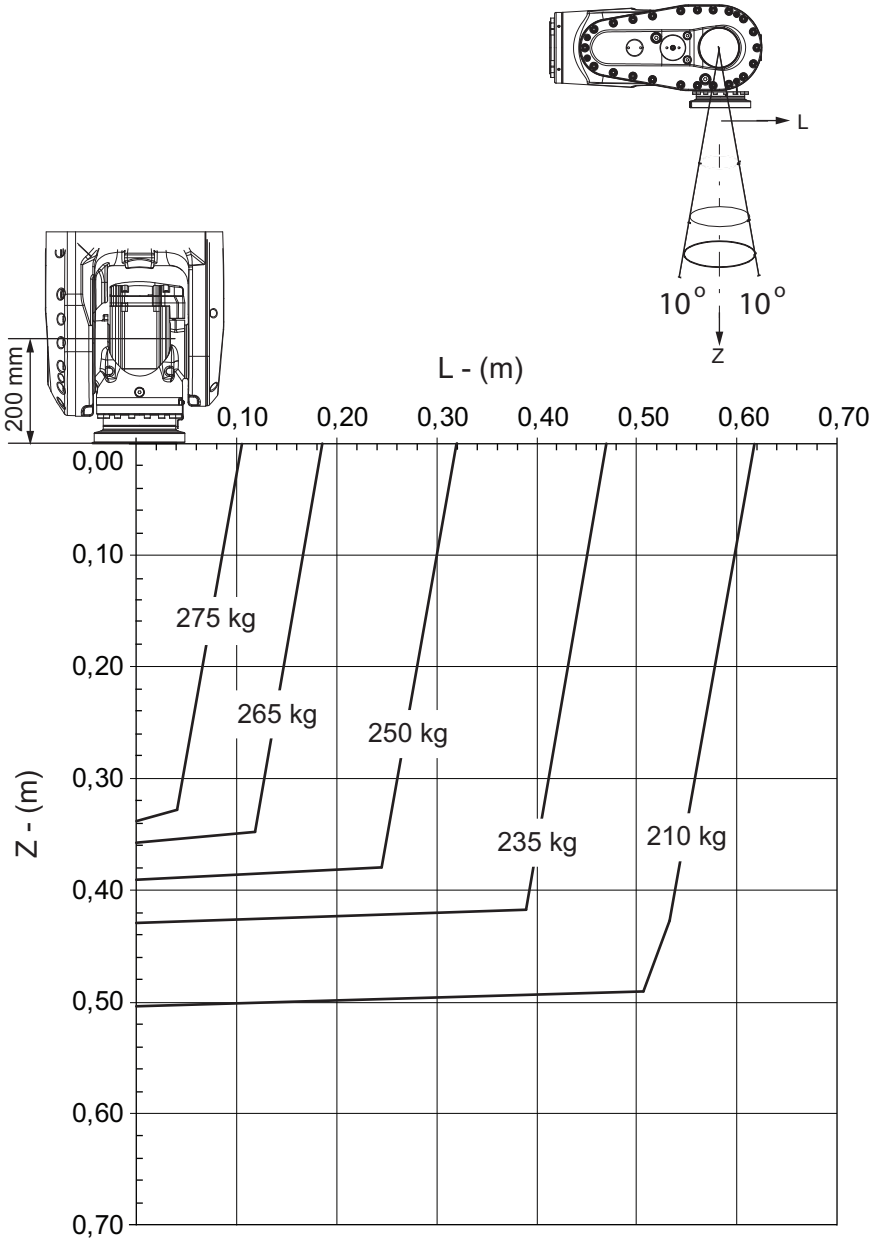

xx1300000246

For wrist down (0° deviation from the vertical line).

	Description
Max load	280 kg
Z_{max}	0.327 m
L_{max}	0.100 m

Continues on next page

© Copyright 2024 ABB. All rights reserved.

IRB 6790-205/2.80

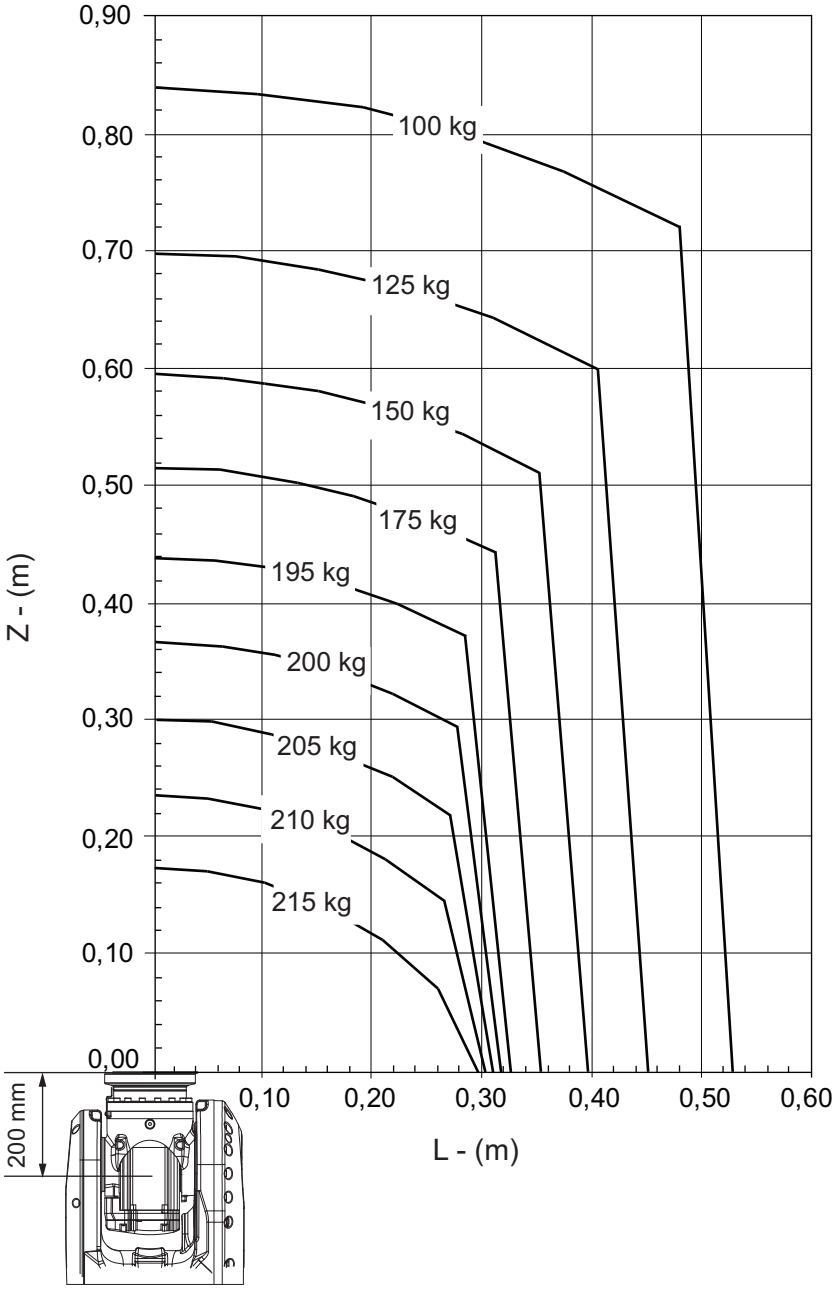

xx1300000249

Continues on next page

© Copyright 2024 ABB. All rights reserved.

IRB 6790-205/2.80 "Vertical Wrist" (±10°)

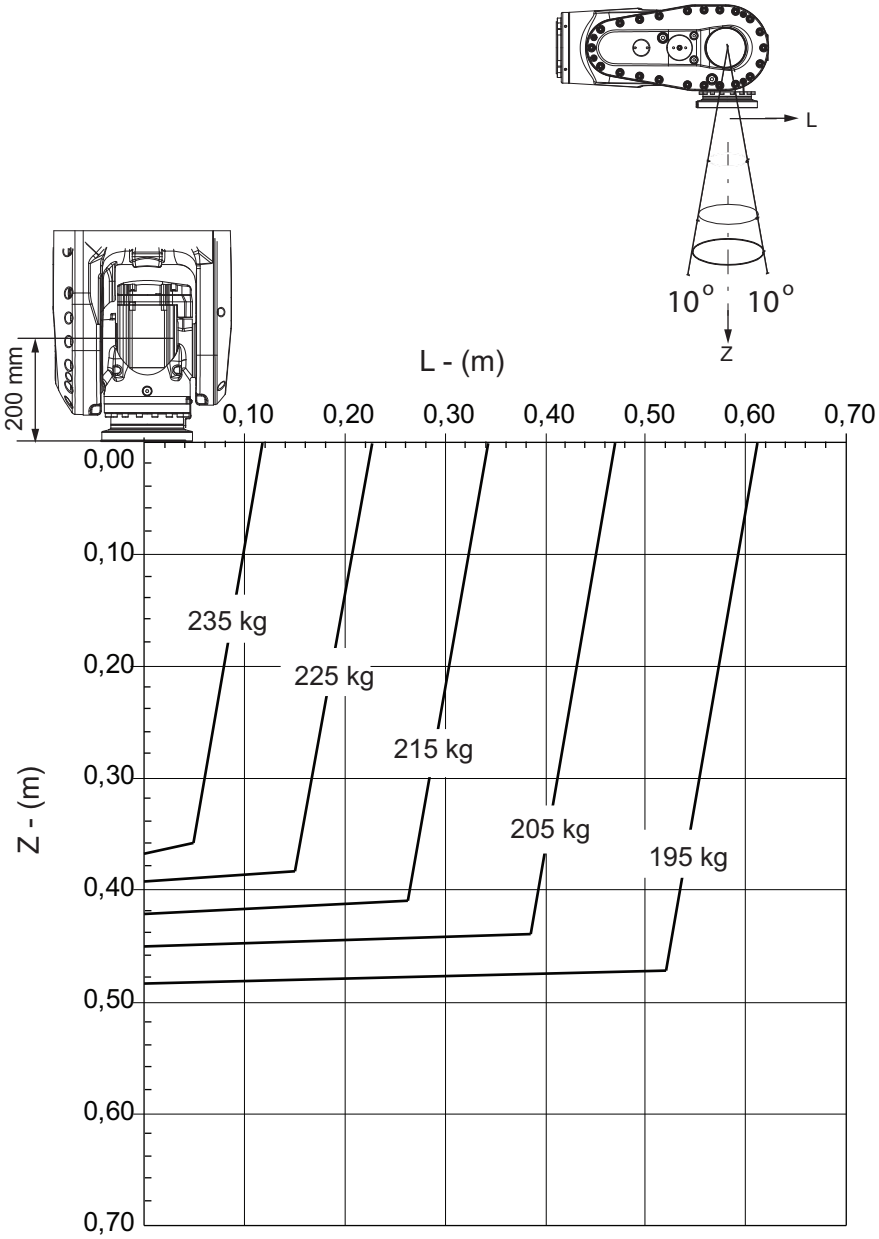

xx1300000250

For wrist down (0° deviation from the vertical line).

	Description
Max load	240 kg
Z_{max}	0.355 m
L_{max}	0.103 m

© Copyright 2024 ABB. All rights reserved.

1.5.3 Maximum load and moment of inertia for full and limited axis 5 (center line down) movement

Note

Total load given as: mass in kg, center of gravity (Z and L) in meters and moment of inertia (J_{ox}, J_{oy}, J_{oz}) in kgm^2. L= sqr (X^2 + Y^2), see the following figure.

Full movement of axis 5 (±130°)

Axis	Robot type	Maximum moment of inertia
5	IRB 6790-235/2.65 IRB 6790-205/2.80	Ja_5 = Load x $((Z + 0{,}200)^2 + L^2)$ + max (J_{0x}, J_{0y}) ≤ 250 kgm^2
6	IRB 6790-235/2.65 IRB 6790-205/2.80	Ja_6 = Load x L^2 + J_{0Z} ≤ 185 kgm^2

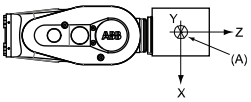

xx1400002028

Pos	Description
A	Center of gravity

	Description
J_{ox}, J_{oy}, J_{oz}	Max. moment of inertia around the X, Y and Z axes at center of gravity.

Continues on next page

© Copyright 2024 ABB. All rights reserved.

1.5.3 Maximum load and moment of inertia for full and limited axis 5 (center line down) movement
Continued

Limited axis 5, center line down

Axis	Robot type	Maximum moment of inertia
5	IRB 6790-235/2.65 IRB 6790-205/2.80	Ja_5 = Load x $((Z + 0{,}200)^2 + L^2)$ + max $(J_{0x}, J_{0y}) \leq 275$ kgm^2
6	IRB 6790-235/2.65 IRB 6790-205/2.80	Ja_6 = Load x $L^2 + J_{0Z} \leq 250$ kgm^2

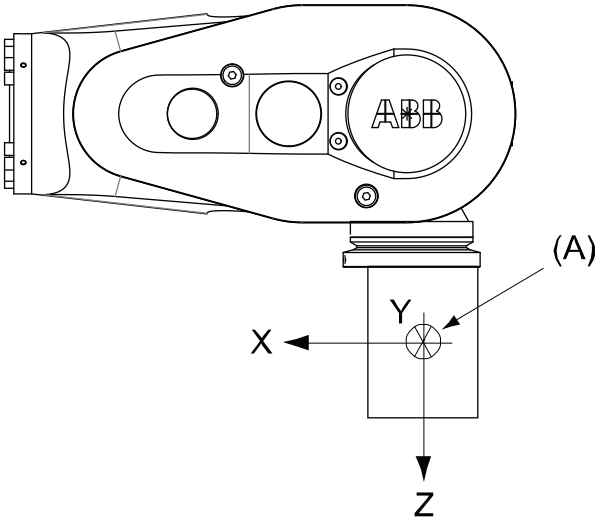

xx1400002029

Pos	Description
A	Center of gravity

	Description
J_{ox}, J_{oy}, J_{oz}	Max. moment of inertia around the X, Y and Z axes at center of gravity.

© Copyright 2024 ABB. All rights reserved.

1.5.4 Wrist torque

Note

The wrist torque values are for reference only, and should not be used for calculating permitted load offset (position of center of gravity) within the load diagram, since those also are limited by main axes torques as well as dynamic loads. Furthermore, arm loads will influence the permitted load diagram. To find the absolute limits of the load diagram, use the RobotStudio add-in RobotLoad.

Torque

The table below shows the maximum permissible torque due to payload.

Robot type	Max wrist torque axis 4 and 5	Max wrist torque axis 6	Max torque valid at load
IRB 6790-235/2.65	1324 Nm	650 Nm	225 kg
IRB 6790-205/2.80	1263 Nm	625 Nm	192 kg

© Copyright 2024 ABB. All rights reserved.

1.5.5 Maximum TCP acceleration

General

Higher values can be reached with lower loads than the nominal because of our dynamical motion control QuickMove2. For specific values in the unique customer cycle, or for robots not listed in the table below, we recommend to use RobotStudio.

Maximum Cartesian design acceleration for nominal loads

Robot type	E-stop Max acceleration at nominal load COG [m/s^2]	Controlled Motion Max acceleration at nominal load COG [m/s^2]
IRB 6790 - 235/2.65	41	22
IRB 6790 - 205/2.8	45	24

Note

Acceleration levels for emergency stop and controlled motion includes acceleration due to gravitational forces. Nominal load is defined with nominal mass and cog with max offset in Z and L (see the load diagram).

© Copyright 2024 ABB. All rights reserved.

1.6 Fitting equipment to the robot

General

Extra loads can be fitted on the upper arm housing, the lower arm, and on the frame. Definitions of distances and masses are shown in the following figures. The robot is supplied with holes for fitting extra equipment (see figure in *Holes for fitting extra equipment on page 46*). Maximum allowed arm load depends on center of gravity of arm load and robot payload.

Note

All equipment and cables used on the robot, must be designed and fitted not to damage the robot and/or its parts.

Frame (hip load)

Extra load can be fitted on the frame.

	Description
Permitted extra load on frame	J_H = 100 kgm^2
Recommended position (see the following figure)	$J_H = J_{H0} + M4 \times R^2$ where: • J_{H0} is the moment of inertia of the equipment • R is the radius (m) from the center of axis 1 • M4 is the total mass (kg) of the equipment including bracket and harness (≤ 250 kg)

Continues on next page

© Copyright 2024 ABB. All rights reserved.

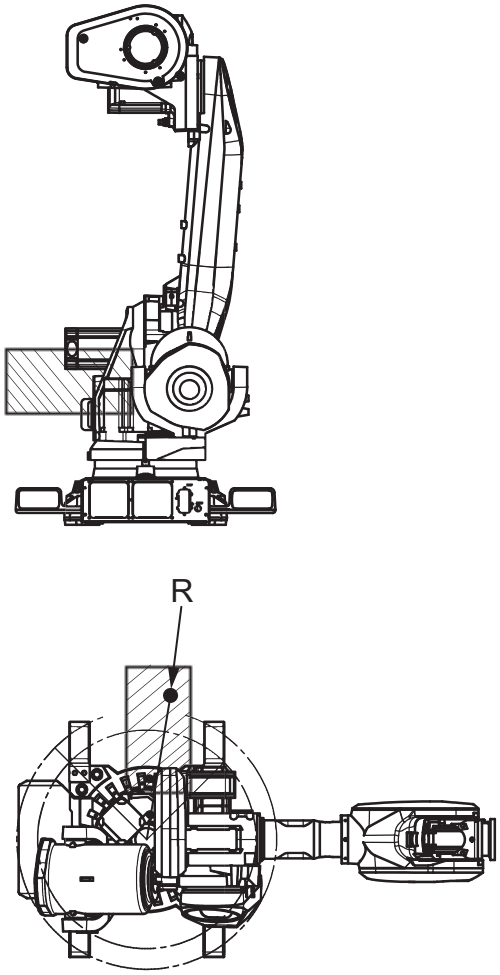

xx1300000262

Upper arm

Allowed extra load on the upper arm housing, in addition to the maximum handling weight, is M1 ≤ 50 kg with a distance (a) ≤ 500 mm from the center of gravity in the axis-3 extension.

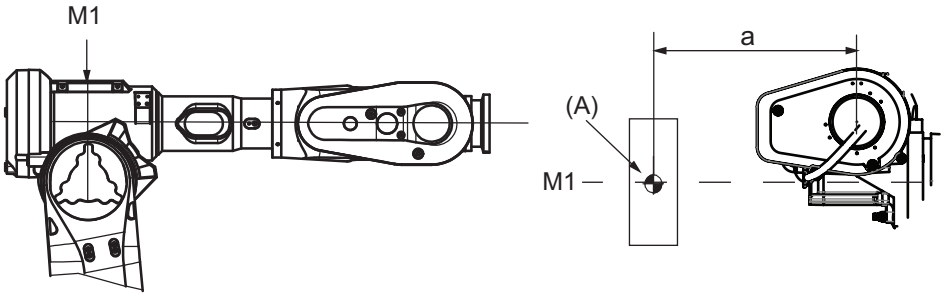

xx1400002019

A	Mass center

Continues on next page

© Copyright 2024 ABB. All rights reserved.

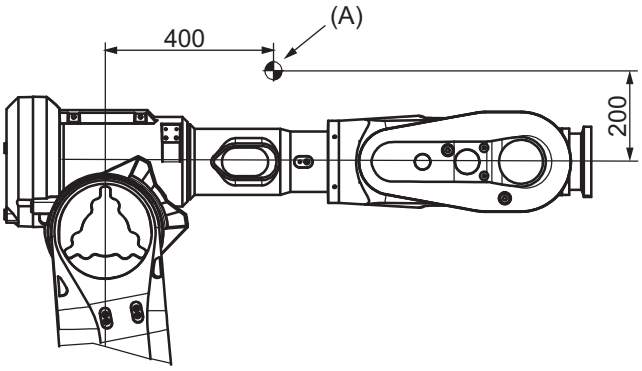

xx1300000866

A	Center of gravity 50 kg

Continues on next page

© Copyright 2024 ABB. All rights reserved.

Holes for fitting extra equipment

Position of attachment holes - drawing 1

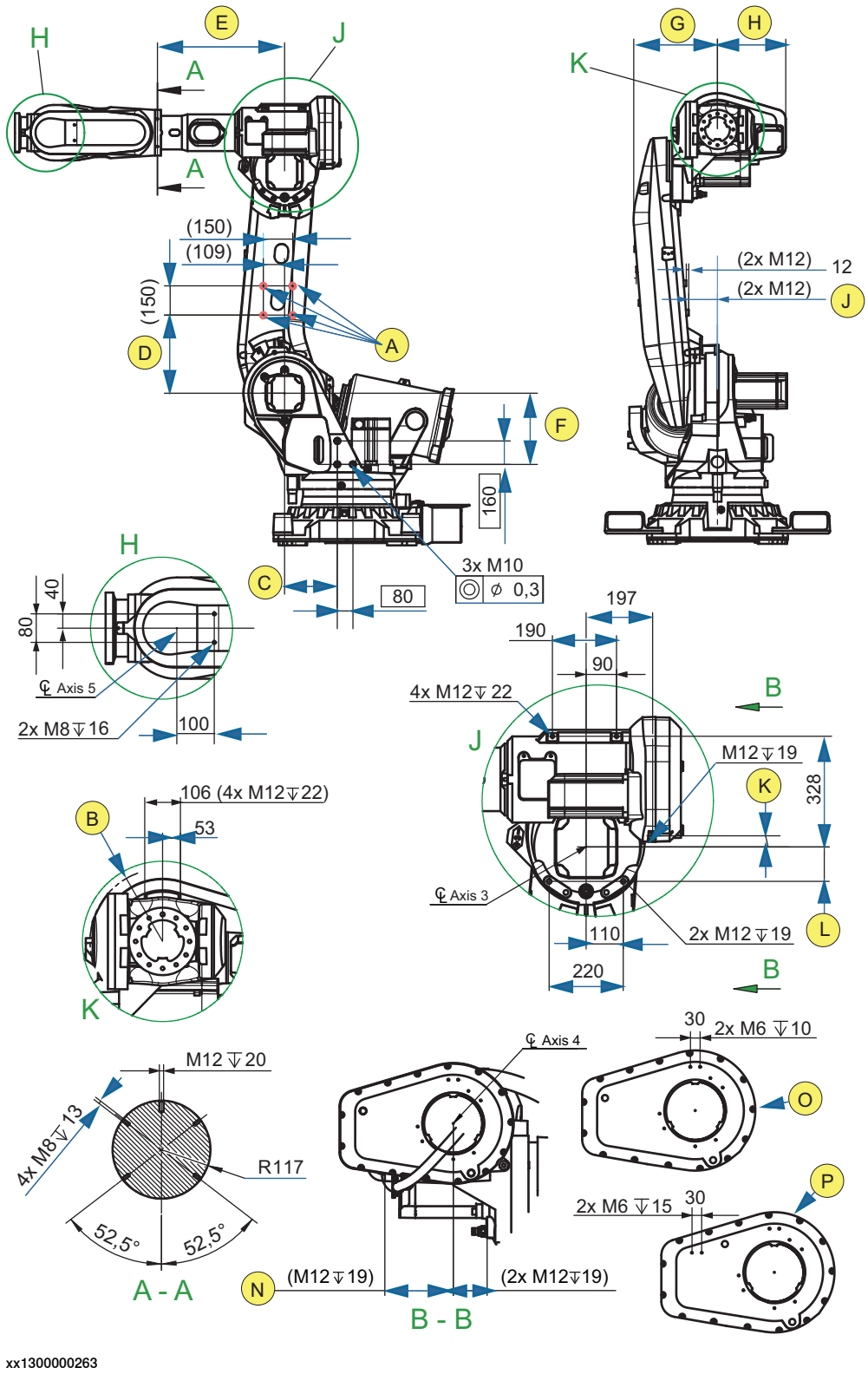

xx1300000263

A	Allowed position for attachment holes, M12 through. Be careful not to touch the cables when drilling.

Continues on next page

© Copyright 2024 ABB. All rights reserved.

O	Attachment holes on arm house cover for extra equipment IRB 6790 - 235/2.65, IRB 6790 - 205/2.80
P	Attachment holes on arm house cover for extra equipment Not valid for IRB 6790

Variant	B[i]	C	D	E	F	G	H	J	K	L	M	N
IRB 6790 - 235/2.65	R=216	270	400	652.5	365	437	349	147	33	102	104	210
IRB 6790 - 205/2.80	R=216	270	500	652.5	365	437	349	147	33	102	104	210

i Smallest circumscribed radius axis-4.

Position of attachment holes - drawing 2

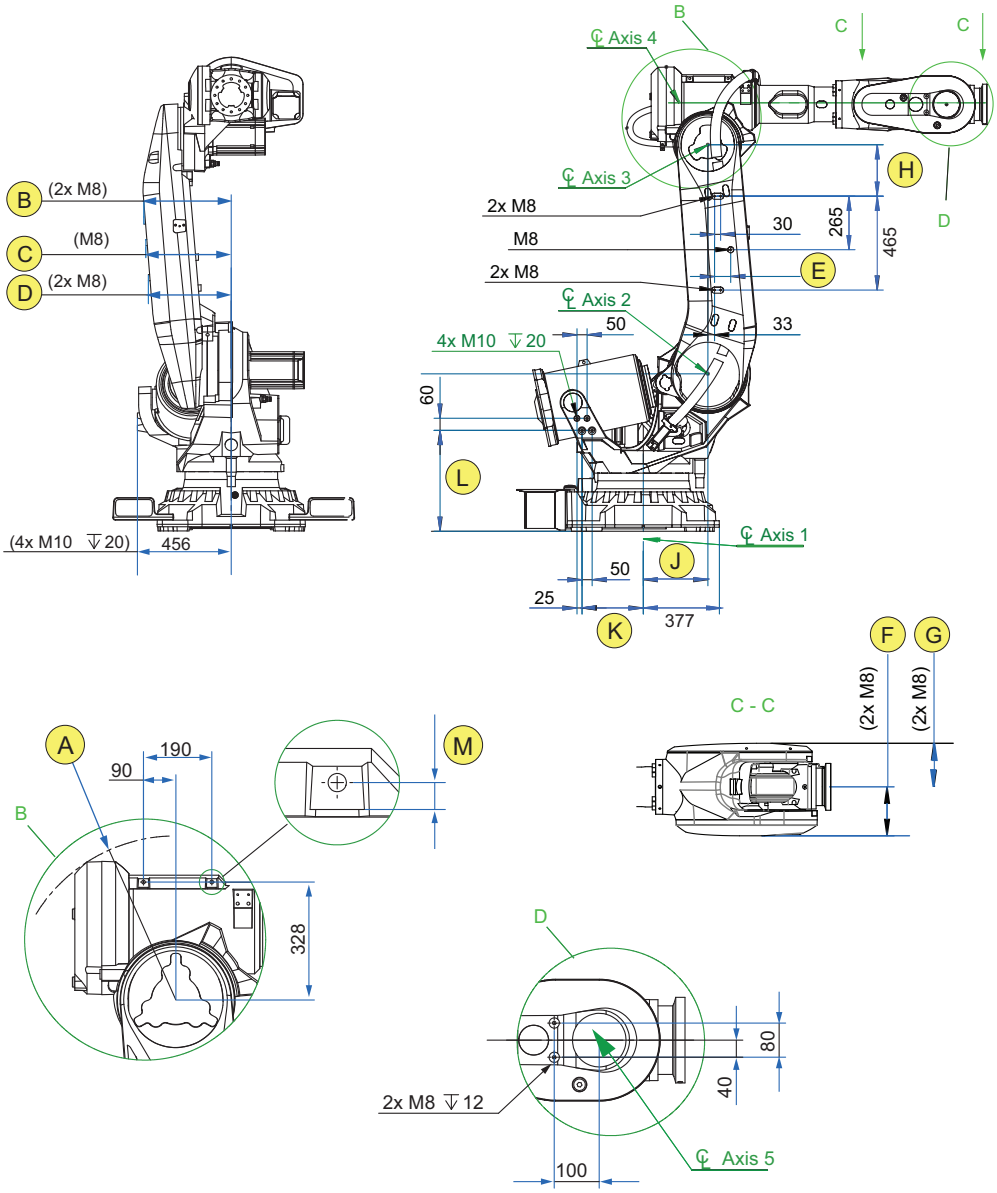

xx1300000264

Variant	A[i]	B	C	D	E	F	G	H	J	K	L	M
IRB 6790 - 235/2.65	R=456	433	418	403	80	208.5	186	255	320	303.5	500	13.8

Continues on next page

© Copyright 2024 ABB. All rights reserved.

1.6 Fitting equipment to the robot
Continued

Variant	A[i]	B	C	D	E	F	G	H	J	K	L	M
IRB 6790 - 205/2.80	R=456	438	423	408	80	208.5	186	255	320	303.5	500	13.8

i Smallest circumscribed radius axis-3.

Extra cover

There is an extra upper arm cover for LID (LeanID) variants, which causes the value A to be different for the LID variants.

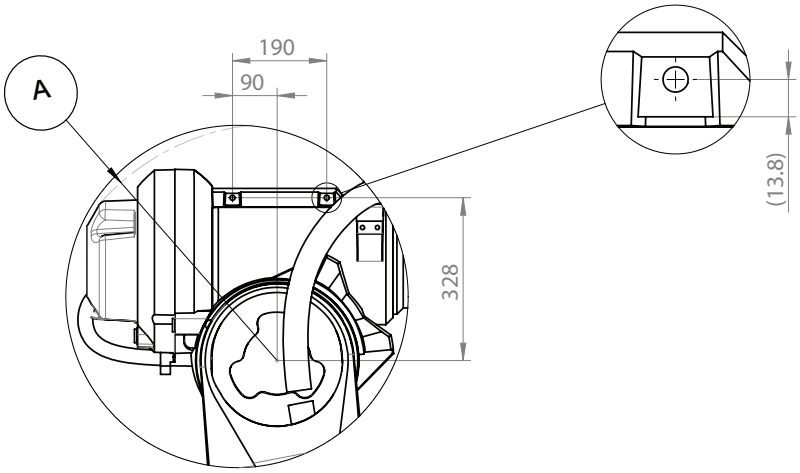

xx2100002054

Tool flange, standard

Below is the standard tool flange. The guide pin hole is, in calibration position, pointing upwards in Z-direction.

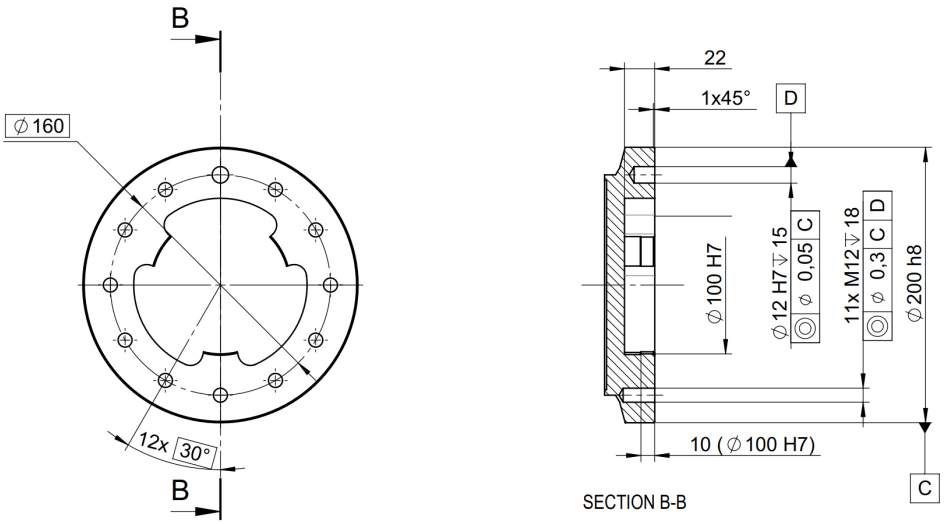

xx1700001590

Fastener quality

When fitting tools on the tool flange, only use screws with quality 12.9. For other equipment use suitable screws and tightening torque for your application.

© Copyright 2024 ABB. All rights reserved.

1.7 Maintenance and troubleshooting

General

The robot requires only minimum maintenance during operation. It has been designed to make it as easy to service as possible:

- Maintenance-free AC motors are used.
- Oil is used for the gearboxes.
- The cabling is routed for longevity, and in the unlikely event of a failure, its modular design makes it easy to change.

Maintenance

The maintenance intervals depend on the use of the robot. The required maintenance activities also depend on the selected options. For detailed information on maintenance procedures, see the maintenance section in *Product manual - IRB 6790 Foundry Prime*.

Warranty

Harsh environments typically involve a lot of different process parameters such as specific fluids, their concentration and certain additives etc. These parameters might affect the visual appearance of selected parts on the robot or cell by means of discoloration, surface or cosmetic corrosion. These cases as well as defects caused by damages in the surface treatment during transport or improper storage that do not directly impact proper function of the robot are excluded from the standard warranty and will not be covered.

© Copyright 2024 ABB. All rights reserved.

1.8 Robot motion

1.8.1 Robot motion

Type of motion

Axis	Type of motion	Range of movement - IRB 6790	Note
Axis 1	Rotation motion	±170° or ±220° (option)	
Axis 2	Arm motion	-65°/+85°	
Axis 3	Arm motion	-180°/+70°	
Axis 4	Wrist motion	±300°	
Axis 5	Bend motion	±130°	
Axis 6	Turn motion	±360°	
		±93.7 revolutions	Maximum value. The default working range for axis 6 can be extended by changing parameter values in the software. Option 610-1 *Independent axis* can be used for resetting the revolution counter after the axis has been rotated (no need for "rewinding" the axis).

Working range

Robot variant	Handling capacity (kg)	Reach (m)
IRB 6790	235	2.65

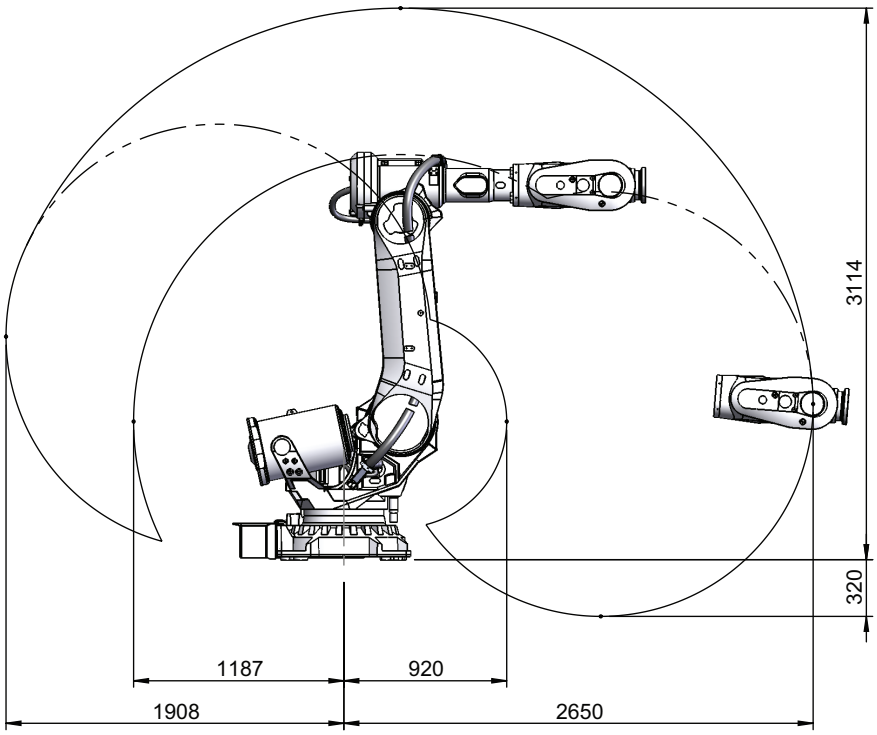

xx1300000281

Continues on next page

© Copyright 2024 ABB. All rights reserved.

Robot variant	Handling capacity (kg)	Reach (m)
IRB 6790	205	2.80

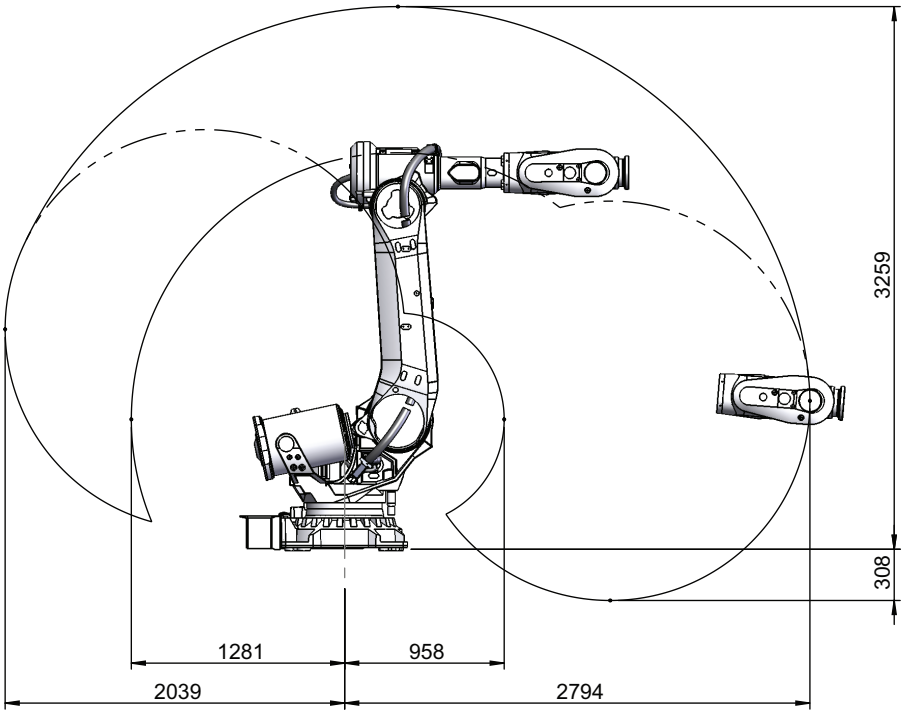

xx1300000282

© Copyright 2024 ABB. All rights reserved.

1.8.2 Performance according to ISO 9283

General

At rated maximum load, maximum offset and 1.6 m/s velocity on the inclined ISO test plane, with all six axes in motion. Values in the table below are the average result of measurements on a small number of robots. The result may differ depending on where in the working range the robot is positioning, velocity, arm configuration, from which direction the position is approached, the load direction of the arm system. Backlashes in gearboxes also affect the result.

The figures for AP, RP, AT and RT are measured according to figure below.

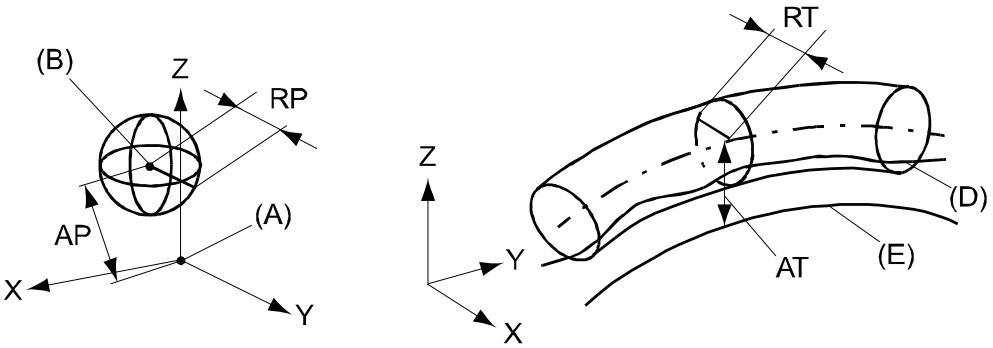

xx0800000424

Pos	Description	Pos	Description
A	Programmed position	E	Programmed path
B	Mean position at program execution	D	Actual path at program execution
AP	Mean distance from programmed position	AT	Max deviation from E to average path
RP	Tolerance of position B at repeated positioning	RT	Tolerance of the path at repeated program execution

IRB 6790	235/2.65	205/2.80
Pose accuracy, AP[i] (mm)	0.03	0.06
Pose repeatability, RP (mm)	0.05	0.05
Pose stabilization time, PSt (s) within 0.4 mm of the position	0.16	0.17
Path accuracy, AT (mm)	1.7	1.5
Path repeatability, RT (mm)	0.08	0.08

i AP according to the ISO test above, is the difference between the teached position (position manually modified in the cell) and the average position obtained during program execution.

© Copyright 2024 ABB. All rights reserved.

1.8.3 Velocity

Maximum axis speed

Robot type	Axis 1	Axis 2	Axis 3	Axis 4	Axis 5	Axis 6
IRB 6790-235/2.65	100 °/s	90 °/s	90 °/s	170 °/s	120 °/s	190 °/s
IRB 6790-205/2.80	100 °/s	90 °/s	90 °/s	170 °/s	120 °/s	190 °/s

There is a supervision function to prevent overheating in applications with intensive and frequent movements (high duty cycle).

© Copyright 2024 ABB. All rights reserved.

1.8.4 Robot stopping distances and times

Introduction

The stopping distances and times for category 0 and category 1 stops, as required by EN ISO 10218-1 Annex B, are listed in *Product specification - Robot stopping distances according to ISO 10218-1* (*3HAC048645-001*).

© Copyright 2024 ABB. All rights reserved.

2 Specification of variants and options

2.1 Introduction to variants and options

General

The different variants and options for the IRB 6790 are described in the following sections. The same option numbers are used here as in the specification form.

The variants and options related to the robot controller are described in the product specification for the controller.

© Copyright 2024 ABB. All rights reserved.

2.2 Manipulator

Variant

Option	IRB Type	Handling capacity (kg)	Reach (m)
435-142	6790	235	2.65
435-143	6790	205	2.80

Protection

Option	Protection type	Note
287-12	Foundry Prime 3	See *Foundry Prime on page 10* for a complete description of protection type Foundry Prime 3.

Requirement

The option [287-12] Foundry Prime 3 requires option [430-1] Upper arm covers.

Fork lift device

Option	Type	Description
159-1	Fork lift device [i]	Lifting device for fork-lift handling.

[i] Its recommended to remove the fork lift devices after use

Upper arm covers

Option	Description	Note
430-1	Upper arm covers	

Working range limit-Axis 1

To increase the safety of the robot, the working range of axis 1 can be restricted by extra mechanical stops.

Option	Type	Description
29-1	15 degrees	Two stops which allow the working range to be restricted in increments of 15°.

For detailed information see *Working range limitation on page 17*.

Extended working range Axis 1

Option	Type	Description
561-1	Axis 1 to ± 220°	To extend the working range on axis 1 from ± 170° to ± 220°. The option 561-1 requires option 810-2, SafeMove. When the option is used, the mechanical stop can after a risk-assessment be removed.

Continues on next page

© Copyright 2024 ABB. All rights reserved.

CAUTION

The option *Extended work range* enables an extension of the working range for axis 1, through a software configuration. With this option installed, the working range can exceed the range limited by the mechanical stop on axis 1. The working range shall be limited through the option SafeMove.

A risk analysis must be done to ensure that no risks remain when using option *Extended work range*, to limit the working range, and before removing the mechanical stops.

For information about the option SafeMove, see *Application manual - Functional safety and SafeMove2*.

If the mechanical stop is removed, then the manipulator should have a marking for this, for example, a label. If the robot is delivered with the option *Extended work range*, then such a label is included on delivery.

© Copyright 2024 ABB. All rights reserved.

2.3 Floor cables

Manipulator cable length

Option	Lengths	Description
210-2	7 m	Length from the manipulator interface plate to controller.
210-3	15 m	
210-4	22 m	

© Copyright 2024 ABB. All rights reserved.

2.4 Process

Process module

Option	Type	Description
768-1	Empty cabinet small	See *Product specification - Controller IRC5 with FlexPendant*
768-2	Empty cabinet large	See *Product specification - Controller IRC5 with FlexPendant*
715-1	Installation kit	See *Product specification - Controller IRC5 with FlexPendant*

© Copyright 2024 ABB. All rights reserved.

2.5 Warranty

Warranty

For the selected period of time, ABB will provide spare parts and labor to repair or replace the non-conforming portion of the equipment without additional charges. During that period, it is required to have a yearly *Preventative Maintenance* according to ABB manuals to be performed by ABB. If due to customer restrains no data can be analyzed with ABB Connected Services for robots with OmniCore controllers, and ABB has to travel to site, travel expenses are not covered. The *Extended Warranty* period always starts on the day of warranty expiration. Warranty Conditions apply as defined in the *Terms & Conditions*.

Note

This description above is not applicable for option *Stock warranty* [438-8]

Option	Type	Description
438-1	Standard warranty	Standard warranty is 12 months from *Customer Delivery Date* or latest 18 months after *Factory Shipment Date*, whichever occurs first. Warranty terms and conditions apply.
438-8	Stock warranty	Maximum 6 months postponed start of standard warranty, starting from factory shipment date. Note that no claims will be accepted for warranties that occurred before the end of stock warranty. Standard warranty commences automatically after 6 months from *Factory Shipment Date* or from activation date of standard warranty in WebConfig. **Note** Special conditions are applicable, see *Robotics Warranty Directives*.

© Copyright 2024 ABB. All rights reserved.

3 Accessories

3.1 Introduction to accessories

General

There is a range of tools and equipment available, especially designed for the manipulator.

Basic software and software options for robot and PC

For more information, see *Product specification - Controller IRC5* and *Product specification - Controller software IRC5*.

Robot peripherals

Note

The peripherals are not available with the Foundry Prime protection type. Always use with caution when installed together with Foundry Prime robots in Foundry Prime environment.

- The Track Motion is not adapted for the remote connector plate on IRB 6790 and the air supply needed for the overpressure in manipulator and the air pressure supervision.
- Track Motion
- Motor Units

© Copyright 2024 ABB. All rights reserved.

This page is intentionally left blank

Index

A
Absolute Accuracy, 32
Absolute Accuracy, calibration, 30
accessories, 61
air quality, 28

C
calibration
  Absolute Accuracy type, 29
  standard type, 29
calibration, Absolute Accuracy, 30
CalibWare, 29
category 0 stop, 54
category 1 stop, 54
compensation parameters, 32

E
equipment, on robot, 43
extended working range, 57

F
fitting equipment to robot, 43

H
holes for equipment, 43

O
option
  Extended working range, 57
options, 55

P
pressurized components
  air quality, 28
product standards, 15

S
safety standards, 15
standards, 15
  EN IEC, 15
  EN ISO, 15
standard warranty, 60
stock warranty, 60
stopping distances, 54
stopping times, 54

V
variants, 55

W
warranty, 60

© Copyright 2024 ABB. All rights reserved.

ABB AB
Robotics & Discrete Automation
S-721 68 VÄSTERÅS, Sweden
Telephone +46 10-732 50 00

ABB AS
Robotics & Discrete Automation
Nordlysvegen 7, N-4340 BRYNE, Norway
Box 265, N-4349 BRYNE, Norway
Telephone: +47 22 87 2000

ABB Engineering (Shanghai) Ltd.
Robotics & Discrete Automation
No. 4528 Kangxin Highway
PuDong New District
SHANGHAI 201319, China
Telephone: +86 21 6105 6666

ABB Inc.
Robotics & Discrete Automation
1250 Brown Road
Auburn Hills, MI 48326
USA
Telephone: +1 248 391 9000

abb.com/robotics

3HAC064168-001, Rev B, en

© Copyright 2024 ABB. All rights reserved.
Specifications subject to change without notice.